## Shrink Disks ST

**Material:** High-quality steel.

- For very high torques.
- No axial shaft-hub movement.
- Quick mounting.
- Quick demounting.
- Not self-centering.
- Concentricity 0.02-0.04 mm.

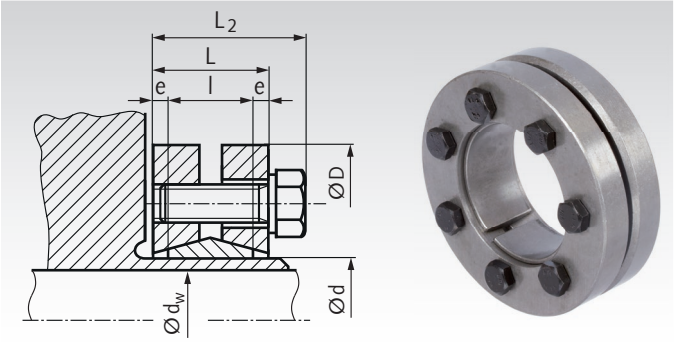


**Ordering Details: e.g.: Product No. 615 814 00, Shrink Disk Inner-Ø 14 mm**

| Product No. | Inner-Ø d mm | Shaft-Ø[1] $d_w$ mm | Torque[2] T Nm | D mm | L mm | $L_2$ mm | l mm | e mm | Fit tol. max. mm | Screws ISO 4017 No. x Size | Fastening Torque $T_A$ Nm | Contact-pressure $P_W$ N/mm² | Weight kg |
|---|---|---|---|---|---|---|---|---|---|---|---|---|---|
| **615 814 00** | 14 | 10 | 40 | 38 | 15 | 18,5 | 10 | 2,5 | 0,014 | 4 x M5 x 12 | 3 | 154 | 0,10 |
| | | 11 | 50 | | | | | | | | | 191 | |
| | | 12 | 65 | | | | | | | | | 243 | |
| **615 816 00** | 16 | 12 | 65 | 41 | 17 | 20,5 | 12 | 2,5 | 0,014 | 5 x M5 x 16 | 3 | 108 | 0,14 |
| | | 13 | 80 | | | | | | | | | 151 | |
| | | 14 | 95 | | | | | | | | | 190 | |
| **615 818 00** | 18 | 14 | 85 | 44 | 17 | 20,5 | 12 | 2,5 | 0,014 | 4 x M5 x 16 | 4 | 172 | 0,15 |
| | | 15 | 100 | | | | | | | | | 205 | |
| | | 16 | 130 | | | | | | | | | 233 | |
| **615 820 00** | 20 | 15 | 110 | 46 | 17 | 20,5 | 12 | 2,5 | 0,017 | 5 x M5 x 16 | 4 | 205 | 0,17 |
| | | 16 | 130 | | | | | | | | | 232 | |
| | | 17 | 150 | | | | | | | | | 258 | |
| **615 821 00** | 21 | 16 | 180 | 50 | 20 | 23,5 | 14 | 3 | 0,017 | 6 x M5 x 18 | 5 | 220 | 0,23 |
| | | 17 | 220 | | | | | | | | | 245 | |
| | | 18 | 270 | | | | | | | | | 275 | |
| **615 824 00** | 24 | 19 | 220 | 50 | 20 | 23,5 | 14 | 3 | 0,017 | 6 x M5 x 18 | 5 | 189 | 0,22 |
| | | 20 | 280 | | | | | | | | | 209 | |
| | | 21 | 330 | | | | | | | | | 228 | |
| **615 830 00** | 30 | 24 | 350 | 60 | 22 | 25,5 | 16 | 3 | 0,017 | 7 x M5 x 18 | 5 | 159 | 0,33 |
| | | 25 | 400 | | | | | | | | | 172 | |
| | | 26 | 470 | | | | | | | | | 184 | |
| **615 836 00** | 36 | 28 | 730 | 72 | 23,5 | 27,5 | 18 | 2,75 | 0,032 | 5 x M6 x 20 | 12 | 232 | 0,52 |
| | | 30 | 860 | | | | | | | | | 240 | |
| | | 31 | 880 | | | | | | | | | 250 | |
| **615 838 00** | 38 | 29 | 710 | 72 | 23,5 | 27,5 | 18 | 2,75 | 0,032 | 6 x M6 x 20 | 12 | 198 | 0,50 |
| | | 30 | 735 | | | | | | | | | 205 | |
| | | 31 | 760 | | | | | | | | | 211 | |
| **615 840 00** | 40 | 30 | 770 | 72 | 23,5 | 27,5 | 18 | 2,75 | 0,032 | 6 x M6 x 20 | 12 | 216 | 0,50 |
| | | 31 | 800 | | | | | | | | | 223 | |
| | | 32 | 825 | | | | | | | | | 230 | |
| **615 844 00** | 44 | 32 | 1200 | 80 | 25,5 | 29,5 | 20 | 2,75 | 0,032 | 7 x M6 x 20 | 12 | 225 | 0,64 |
| | | 35 | 1400 | | | | | | | | | 235 | |
| | | 36 | 1500 | | | | | | | | | 244 | |
| **615 850 00** | 50 | 38 | 1500 | 90 | 27,5 | 31,5 | 22 | 2,75 | 0,032 | 8 x M6 x 25 | 12 | 204 | 0,87 |
| | | 40 | 1800 | | | | | | | | | 219 | |
| | | 42 | 2100 | | | | | | | | | 232 | |
| **615 855 00** | 55 | 42 | 1700 | 100 | 30,5 | 34,5 | 23 | 3,75 | 0,032 | 8 x M6 x 25 | 12 | 176 | 1,18 |
| | | 45 | 2100 | | | | | | | | | 193 | |
| | | 48 | 2600 | | | | | | | | | 210 | |
| **615 862 00** | 62 | 48 | 2700 | 110 | 30,5 | 34,5 | 23 | 3,75 | 0,048 | 10 x M6 x 25 | 12 | 213 | 1,41 |
| | | 50 | 3000 | | | | | | | | | 218 | |
| | | 52 | 3200 | | | | | | | | | 222 | |
| **615 868 00** | 68 | 50 | 2500 | 115 | 30,5 | 34,5 | 23 | 3,75 | 0,048 | 10 x M6 x 25 | 12 | 184 | 1,46 |
| | | 55 | 3100 | | | | | | | | | 188 | |
| | | 60 | 4100 | | | | | | | | | 212 | |
| **615 875 00** | 75 | 55 | 3500 | 138 | 32,5 | 37,8 | 25 | 3,75 | 0,048 | 7 x M8 x 30 | 30 | 199 | 2,45 |
| | | 60 | 4700 | | | | | | | | | 221 | |
| | | 65 | 6000 | | | | | | | | | 241 | |

[1] Shaft-Ø of the customer´s machine (for example). [2] Transmittable values with shaft-Ø $d_w$ of the customer´s machine, if the fit tolerance is complied.

**More sizes up to inner-Ø d=280mm, for shaft diameter 230mm and 327,000Nm are available on request.**

## Surface Roughness, Tolerances and Mounting

Roughness: max, $R_Z$=16 µm. Outer-Ø tolerance of hub = H9. Recommended tolerances for hub bore / shaft diameter: from $d_w$ Ø 30 = H6/j6; Ø 31-50 = H6/h6; Ø 51-65 = H6/g6.

**It is essential to degrease the contact surfaces of shaft and hub bore.** Lubricate only the shrink disk and the screws with $MoS_2$ and place it on the hub. Turn in the screws evenly by hand.

Fasten the tensioning screws evenly, in sequence (not crossing over) until the fastening torque $T_A$ of the table is reached. To reach the value of $T_A$, several fastening steps are required. The figures for T stated in the table were calculated for a lubricated shrink disk.