Tubular Handles 333, with Inclined Feet, Aluminium

Material: Grip tube Ø28mm x 1.5 mm made from Aluminium. Either natural coloured anodised or black plastic coated RAL 9005 matt.
Feet made from zinc die cast, black plastic coated RAL 9005 matt.

High stability for small sizes. Tube either aluminium silver or black. Grip tube fixed against turning with screws on the face ends (screws below bright grey removable plastic caps).

Other sizes on request.

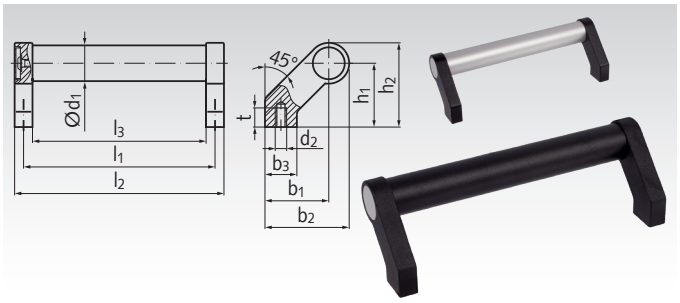

Ordering Details: e.g.: Product No. 666 505 02, Tubular handle 333, aluminium colour, length 200mm

Product No. alu colour	Product No. black	$l_1^{+0,5}$ mm	d_1 mm	d_2 mm	b_1 mm	b_2 mm	b_3 mm	h_1 mm	h_2 mm	l_2 mm	l_3 mm	$t_{min.}$ mm	Weight g
666 505 02	**666 505 22**	200	28	M8	50	66	25	50	66	214	186	15	432
666 505 04	**666 505 24**	250	28	M8	50	66	25	50	66	264	236	15	455
666 505 06	**666 505 26**	300	28	M8	50	66	25	50	66	314	286	15	470
666 505 08	**666 505 28**	400	28	M8	50	66	25	50	66	414	386	15	530
666 505 10	**666 505 30**	500	28	M8	50	66	25	50	66	514	486	15	575
666 505 12	**666 505 32**	600	28	M8	50	66	25	50	66	614	586	15	620

Tubular Handles 333.1, with Straight Feet, Aluminium

Material: Grip tube Ø20mm / Ø28mm x 1.5mm made from Aluminium. Either natural coloured anodised or black plastic coated RAL 9005 matt.
Feet made from zinc die cast, black plastic coated RAL 9005 matt.

High stability for small sizes. Tube either aluminium silver or black. Grip tube fixed against turning with screws on the face ends (screws below bright grey removable plastic caps).

Other sizes on request.

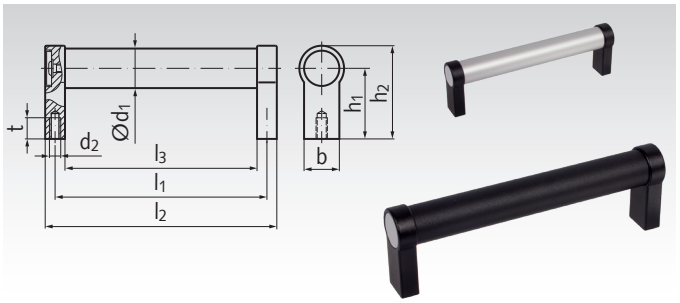

Ordering Details: e.g.: Product No. 666 505 02, Tubular handle 333.1, aluminium colour, length 180mm

Product No. alu colour	Product No. black	$l_1^{+0,2}$ mm	d_1 mm	d_2 mm	b mm	h_1 mm	h_2 mm	l_2 mm	l_3 mm	$t_{min.}$ mm	Weight g
666 505 42	**666 505 72**	180	20	M6	24	42	54	192	168	12	190
666 505 44	**666 505 74**	200	20	M6	24	42	54	212	188	12	200
666 505 46	**666 505 76**	250	20	M6	24	42	54	262	238	12	225
666 505 48	**666 505 78**	300	20	M6	24	42	54	312	288	12	250
666 505 50	**666 505 80**	400	20	M6	24	42	54	412	388	12	300
666 505 52	**666 505 82**	200	28	M8	25	50	66	214	186	15	340
666 505 54	**666 505 84**	250	28	M8	25	50	66	264	236	15	360
666 505 56	**666 505 86**	300	28	M8	25	50	66	314	286	15	380
666 505 58	**666 505 88**	400	28	M8	25	50	66	414	386	15	440
666 505 60	**666 505 90**	500	28	M8	25	50	66	514	486	15	480
666 505 62	**666 505 92**	600	28	M8	25	50	66	614	586	15	520

Tubular Handles 335, with Straight Feet, Stainless Steel

Material: Grip tube Ø28mm x 2 mm made from Stainless Steel 1.4305 (AISI 303), silk matt gloss, ground. STAINLESS
Feet made from stainless steel, precision cast 1.4308 (CF-8), matt blasted.

Very high stability for small sizes.
Connection between tube and foot is sealed against water spray.

Other sizes on request.

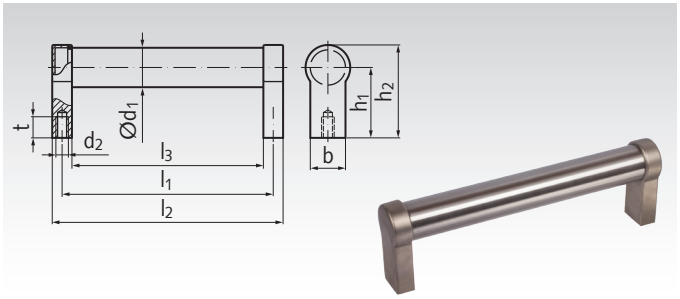

Ordering Details: e.g.: Product No. 666 995 52, Tubular handle 335, length 200 mm

Product No. stainless	l_1^{+1} mm	d_1 mm	d_2 mm	b mm	h_1 mm	h_2 mm	l_2 mm	l_3 mm	$t_{min.}$ mm	Weight g
666 995 52	200	28	M8	25	50	66	214	186	15	500
666 995 54	250	28	M8	25	50	66	264	236	15	565
666 995 56	300	28	M8	25	50	66	314	286	15	630
666 995 58	400	28	M8	25	50	66	414	386	15	760
666 995 60	500	28	M8	25	50	66	514	486	15	890
666 995 62	600	28	M8	25	50	66	614	586	15	1020