



Mounting Instructions

Safety Clutch SI

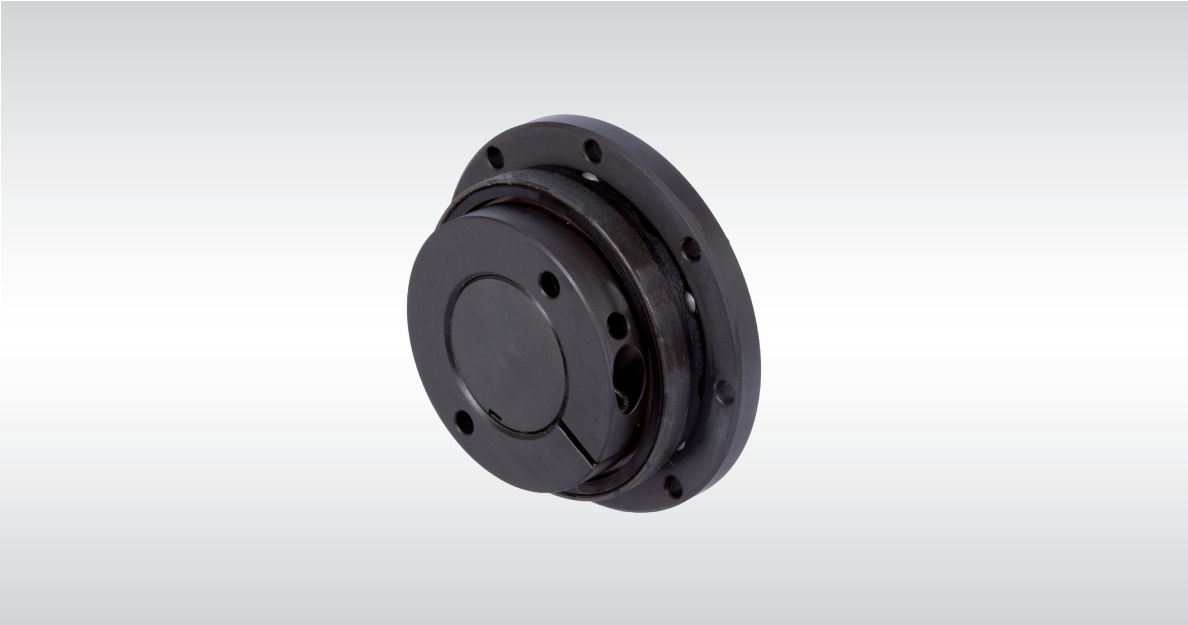

MÄDLER®
GEGRÜNDET 1882

Responsible MÄDLER® branches according to German Post Code Areas:

PCA 1, 2 and 3
Subsidiary
MÄDLER GmbH
Brookstieg 16
D-22145 Stapelfeld
Tel. +49 40-60 04 75 10
Fax +49 40-60 04 75 33
hamburg@maedler.de

PCA 0, 4 und 5
Subsidiary
MÄDLER GmbH
Bublitzer Str. 21
D-40599 Düsseldorf
Tel. +49 211-97 47 1 0
Fax +49 211-97 47 1 33
duesseldorf@maedler.de

PCA 6, 7, 8 und 9
Headquarter
MÄDLER GmbH
Tränkestr. 6-8
D-70597 Stuttgart
Tel. +49 711-7 20 95 0
Fax +49 711-7 20 95 33
stuttgart@maedler.de

For Switzerland:

MÄDLER Norm-Antrieb AG
Postbox 74
Güterstr. 6
CH-8245 Feuerthalen
Tel. +41 52-647 40 40
Fax +41 52-647 40 41
info@maedler.ch
www.maedler.ch

Safety clutch SI

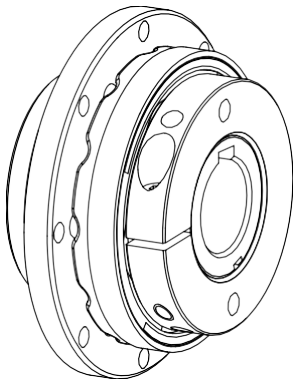

The **SI safety clutch** is a positive locking overload system. It protects downstream components from destruction. In the event of an overload, the clutch re-engages in the next detent after every 30°.

Table of contents

1. Technical data

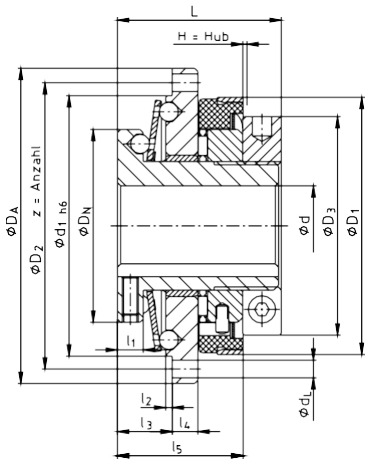

Fig. 1: Hub design

Table 1: Dimensions

Size	max. finished bore d [mm]	Dimensions [mm]														
		D_A	D_2	d_1	D_N	D_3	D_1	d_L	L	l_1	l_2	l_3	l_4	l_5	z	H (Hub)
20	20	20	71	65	48	54	61,5	4,5	45	8	2	16	6	35	8	2
25	25	25	89	81	60	68	80	5,5	50	8	2	17	8	39	8	2
35	35	35	110	102	75	78	91	5,5	60	10	2	21	10	42	12	2
50	50	50	152	142	105	108	121	6,6	70	12	2	25	13	56	12	2

Table 2: Technical data

Size	max. speed [min]$^{-1}$	Torques [Nm]	
		TD1	TD2*
20	1500	6 - 20	15 - 30
25	1500	20 - 60	45 - 90
35	1000	25 - 80	75 - 150
50	1000	60 -180	175 - 300

2. Notes

2.1 General information

Read these installation instructions carefully before putting the clutch into operation.
Pay particular attention to the safety instructions!
The assembly instructions are part of your product. Keep them carefully and in the vicinity of the coupling.

2.2 Safety and information signs

DANGER! - Risk of injury to persons

ATTENTION! - Damage to the machine possible

NOTE! - Reference to important points

2.3 General hazard information

DANGER!

When installing, operating and maintaining the clutch, ensure that the entire drive train is secured against accidental activation. You could be seriously injured by rotating parts. It is therefore essential that you read and follow the following safety instructions.

- All work with and on the clutch must be carried out with "safety first" in mind.
- Switch off the drive unit before carrying out any work on the clutch.
- Secure the drive unit against unintentional switch-on, e.g. by affixing signs at the switch-on point or removing the power supply fuse.
- Do not reach into the working area of the clutch when it is still in operation.
- Secure the clutch against accidental contact. Fit appropriate protective devices and covers.

2.4 Intended use

You may only install, operate and maintain the clutch if you

- have carefully read and understood the installation instructions
- are professionally trained
- are authorised to do so by your company

The clutch may only be used in accordance with the technical data. Unauthorised structural modifications to the clutch are not permitted. We accept no liability for any resulting damage. In the interest of further development, we reserve the right to make technical modifications.
The **SI safety coupling** described here corresponds to the state of the art at the time these installation instructions went to press.

3 Storage

The clutches are supplied preserved and can be stored in a covered, dry place for up to 6 - 9 months.

ATTENTION!

Damp storage rooms are unsuitable.
Care must be taken to ensure that no condensation occurs.
The most favourable relative humidity is below 65%.

4 Mounting

The **SI safety coupling** is supplied assembled.

4.1 Components

Component	Quantity	Naming
1	1	Hub
2	1	Disc spring
3	1	Flange ring
4	1	Adjustment ring
5	1	Shift ring
6	1	Adjusting nut
7	1	Sliding bush
8	1	Axial needle roller and cage assembly
9	1	Wave spring washer
10	1	Set screw DIN EN ISO 4762
11	1	Grub screw DIN EN ISO 4029
12	1	Grub screw with pin DIN EN ISO 4028
13	3	Plug-in grooved pin DIN EN ISO 8741
14	6	Half-round notched nail DIN EN ISO 8746
15	18	Ball DIN 5401

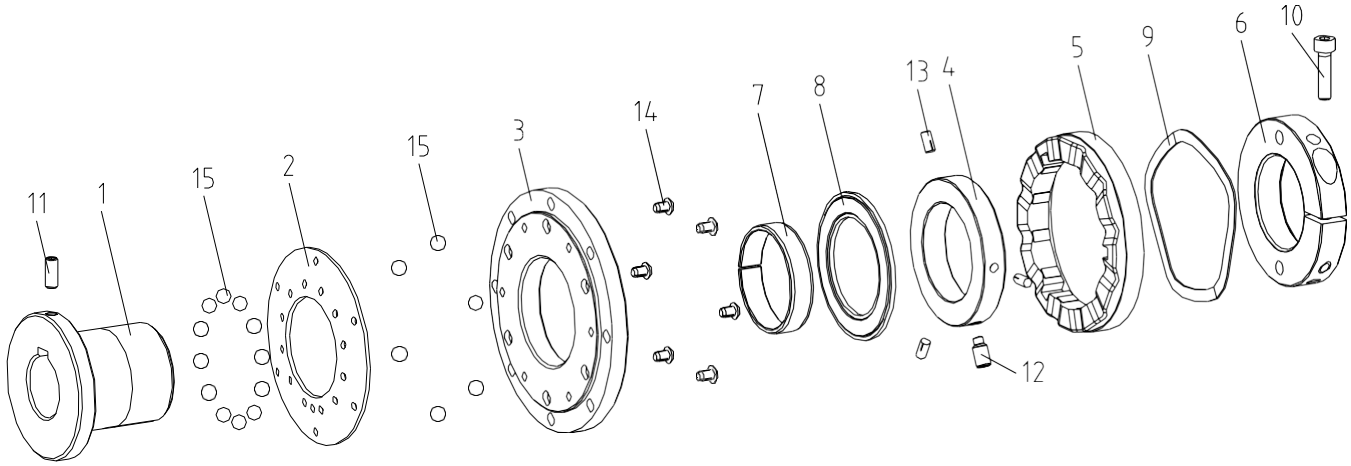

Figure 3: Safety clutch S

4.2 Assembly (general)

NOTE! ☞

We recommend checking the holes, shaft, groove and feather key for dimensional accuracy before installation.

- Ensure that the SI safety clutch is in perfect technical condition.
- If necessary, clean the components before installation and commissioning.
- Grease the balls (e.g. Klüber-Microlube GL 263)
- Only use original parts.

4.3 Setting the cogging torque

- Secure the hub against twisting.
- Loosen the adjusting screw in the adjusting nut.
- Use a hook spanner to turn the adjusting nut (higher locking torque clockwise, lower locking torque anti-clockwise) to the desired twist angle (see locking torque table).

ATTENTION! ⚠

The SI safety clutch must never be set above the maximum detent torque!

- Once the desired detent torque has been set, tighten the adjusting nut again by tightening the adjusting screw on the threaded part of the hub.
- TD2 disc spring combination on request.

Cogging torque table:

Twist angle adjusting nut	Cogging torque [Nm]							
	Size 20		Size 25		Size 35		Size 50	
	Spring TD1	Spring TD2*	Spring TD1	Spring TD2*	Spring TD1	Spring TD2*	Spring TD1	Spring TD2*
30°	5							
60°	7		20		25		57	
90°	8	15	23		28		65	
120°	9	17	25		32		73	
150°	11	20	29		35		80	
180°	13	23	33	46	38		88	
210°	15	25	37	52	40	78	95	
240°	17	27	41	58	45	86	100	
270°	18	29	45	64	49	93	110	
300°	20	30	49	70	53	100	118	
330°			52	76	57	108	126	175
360°			55	82	61	115	134	188
390°			58	86	66	122	142	200
420°			60	90	71	129	150	212
450°					74	136	157	225
480°					77	143	165	237
510°					80	150	172	250
540°							180	262
570°								275
600°								288
630°								300

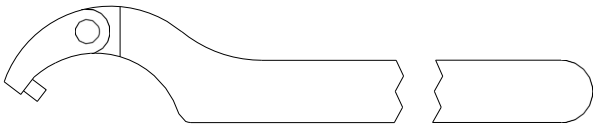

Size	Hinged hook spanner with pin
20	Ø35 - 60 x 5
25	Ø60 - 90 x 6
35	Ø60 - 90 x 6
50	Ø90 - 155 x 8

Figure 5: Hinge - hook spanner

4.4 Adjusting the cogging torque after disassembly

- Insert the balls with grease (e.g. Klüber-Microlube GL 263) into the blind holes of the hub (12 balls) and the flange ring (6 balls).
- Place the concave side of the disc spring on the flange ring, with the balls engaging in the disc spring holes (note the pitch).
- Push the flange ring with the disc spring onto the hub and align the flange marking (bore) with the outer hub groove.
- Check that all balls are correctly seated in the holes.
- Fit the axial needle bearing.
- Push on the adjusting ring with the large outer bevel pointing towards the hub thread.
- Position the shift ring with the front grooves in the correct position in relation to the half-round centre pins and push it onto the adjusting ring (note the pitch). The pins of the adjustment ring also engage in the axial grooves of the shifting ring.
- Check the function of the shift ring (axial stroke ≥ 2 mm).
- Push the shaft spring washer onto the adjusting ring and into the shift ring.
- Tighten the adjusting nut with the adjusting screw clockwise by hand as far as it will go.
- Set the desired cogging torque by turning the adjusting nut clockwise with a hook spanner (see cogging torque table).
- The adjusting nut must be secured by tightening the adjusting screw.

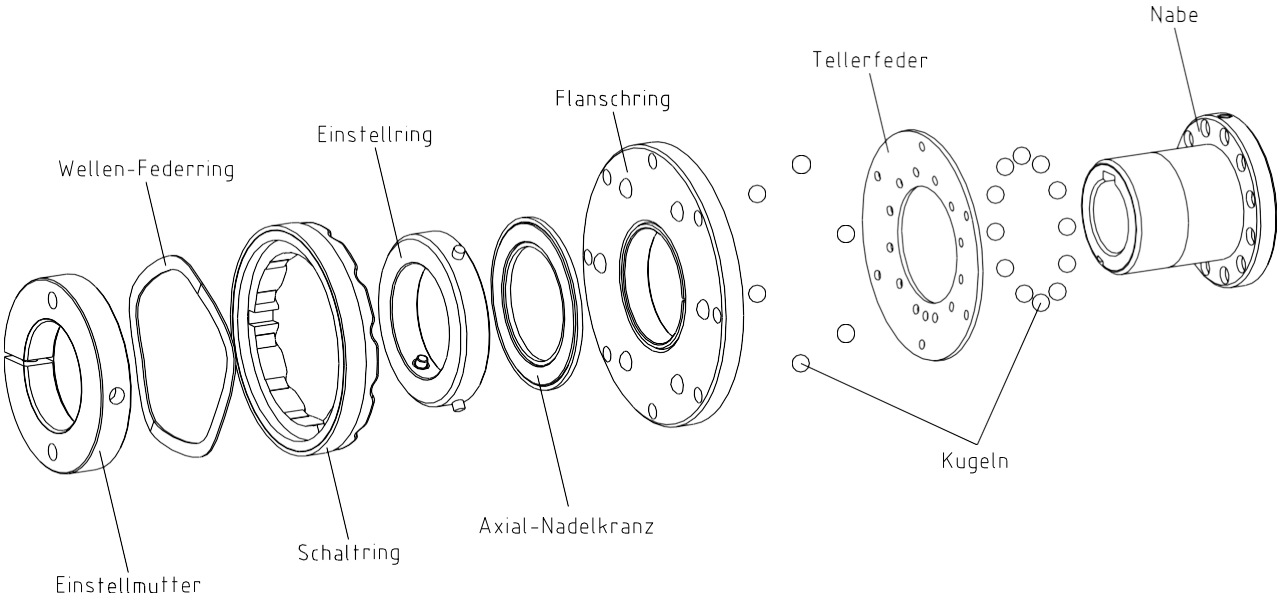

Picture 6

4.5 Mounting the SI safety clutch

Feather key connection

The following options are available for axial fastening with cylindrical finish bore (standard: ISO fit - H7) and keyway (standard: DIN 6885, sheet 1 - JS9):

1. Tighten the grub screw onto the feather key or shaft
2. Secure the hub with an end disc and screw. The grub screw must be removed.

4.6 Limit switch

Function

A mechanical limit switch or an inductive sensor is actuated by the axial stroke of the switching ring that occurs in the event of an overload. This generates a control signal that can be analysed to switch off the drive.

Assembly

The sensor must be mounted in a stable device to ensure trouble-free operation. The sensor should be protected against dirt and possible mechanical faults.

Adjustment

When the overload clutch engages, the switching ring performs an axial stroke movement of approx. 2 mm. The sensor or limit switch must be mounted in this switching range. In order to match the mechanical limit switch and the switching travel to the system, the limit switch must be adjusted accordingly. To do this, the switching path can be adjusted on the plunger after opening the cover plate.

ATTENTION! ⚠

It is essential to check the function of the limit switch before delivery of the system. The axial stroke of the switching ring must not be blocked by other components.

4.7 Spare parts inventory

Stocking important spare parts on site is a basic requirement to ensure that the clutch is ready for use.